business@danau.cn

DANAU

DBC SERIES

B

VERSION
Solid Male Shaft
MALE SHAFT
DIA. 24mm
KEY 8.0mm

APPLICATIONS. Consult us for more

PRESSURE WASHING | MISTING AND FOG MAKING | HOT WATER APPLICATION | HIGH PRESSURE COOLANT | WATER TREATMENT | WATER JET CUTTING

COMPONENTS

MANIFOLD Brass Forged | **CRANKCASE** Aluminum Alloy | **CRANKSHAFT** Forged Steel Alloy | **CONNECTING ROD** Aluminum Alloy | **PLUNGER** Coating Ceramic | **PACKING** U Type Dual Seal

TECHNICAL DATA

Manifold:	Brass forged
Crankcase:	Die-cast aluminum alloy, anodized
Connecting Rod:	One piece aluminum alloy
Plunger:	Ceramic coating, precision grinded.
Packing:	U type, high-low dual pressure packing
Bearing:	Ball and needle bearing
Crankshaft:	Forged steel alloy, heat treatment, multiple process grinded

Head Port:	Inlet 3/8", Outlet 1/2"
Unloader:	Banjo bolt, trap type
Unloader Port:	Inlet 3/4" (BSP or NH), Outlet 3/8" Quick Connect
Oil Bath Capacity:	450ml (half level of oil gauge),
Oil Type:	15W/40 Non-Detergent
Water Inlet Pressure:	0-50psi/3.5bar
Max Inlet Water Temp.	≤ 50°C/122°F

MODEL	MAX FLOW		MAX PRESSURE		POWER INPUT	POWER SPEED	WEIGHT	SHIPPING SIZE
	GPM	LPM	PSI	BAR	KW	RPM	KG	CM
DBC-1507B	2.7	10.4	2700	186	4.0	2860	7.7	27.5x24.5x22.5
DBC-1510B	3.9	14.8	2700	186	5.5	2860	7.7	27.5x24.5x22.5
DBC-1514B	2.8	10.7	3400	235	5.5	1450	7.7	27.5x24.5x22.5
DBC-1812B	3.5	13.3	3070	212	5.5	1450	8	27.5x24.5x22.5
DBC-1814B	4.1	15.5	2600	179	5.5	1450	8	27.5x24.5x22.5
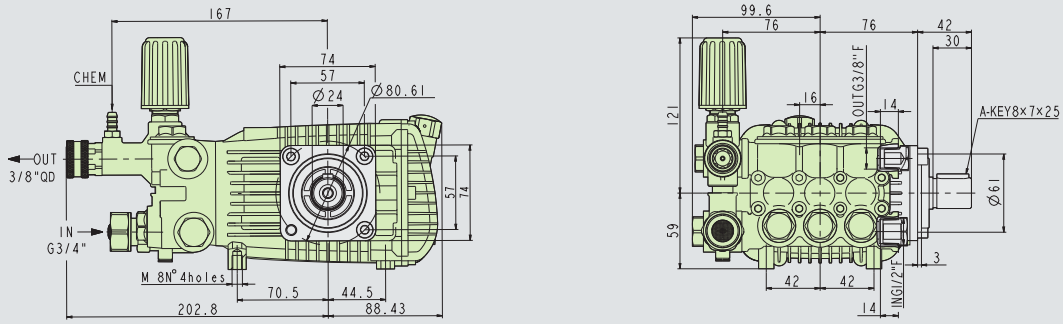
OVERALL DIMENSION