business@danau.cn

DANAU

DBC SERIES

A5 VERSION

Engine Direct Drive
HOLLOW SHAFT
1in 25.4mm
KEY 6.35mm

APPLICATIONS. Consult us for more

PRESSURE WASHING | MISTING AND FOG MAKING | HOT WATER APPLICATION | HIGH PRESSURE COOLANT | WATER TREATMENT | WATER JET CUTTING

COMPONENTS

MANIFOLD
Brass Forged

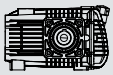

CRANKCASE
Aluminum Alloy

CRANKSHAFT
Forged Steel Alloy

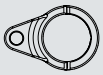

CONNECTING ROD
Aluminum Alloy

PLUNGER
Coating Ceramic

PACKING
U Type Dual Seal

TECHNICAL DATA

Manifold:	Brass forged
Crankcase:	Die-cast aluminum alloy, anodized
Connecting Rod:	One piece aluminum alloy
Plunger:	Ceramic coating, precision grinded.
Packing:	U type, high-low dual pressure packing
Bearing:	Ball and needle bearing
Crankshaft:	Forged steel alloy, heat treatment, multiple process grinded

Head Port:	Inlet 3/8", Outlet 1/2"
Unloader:	Banjo bolt, trap type
Unloader Port:	Inlet 3/4" (BSP or NH), Outlet 3/8" Quick Connect
Oil Bath Capacity:	450ml (half level of oil gauge),
Oil Type:	15W/40 Non-Detergent
Water Inlet Pressure:	0-50psi/3.5bar
Max Inlet Water Temp.	≤ 50°C/122°F

MODEL	MAX FLOW		MAX PRESSURE		POWER INPUT	POWER SPEED	WEIGHT	SHIPPING SIZE
	GPM	LPM	PSI	BAR	HP	RPM	KG	CM
DBC-15085A5	4.0	15.3	3000	206	9	3400	8.3	32x28.5x26
DBC-1510A5	4.8	18	3600	248	13	3400	8.3	32x28.5x26
DBC-1512A5	5.7	21.6	3200	220	13	3400	8.3	32x28.5x26
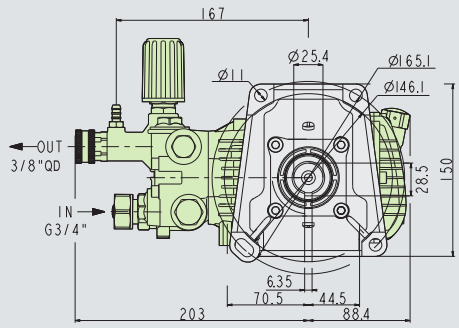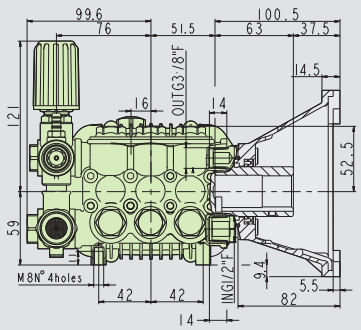
OVERALL DIMENSION